Cylindrical & Splitter Silencers For Fan Systems

FläktWoods

Cylindrical Silencers

Type B & C Silencers

Construction

Casings are of rolled, pre-galvanised sheet steel with spun end rings incorporating tapped inserts for fixing. Suitable fixing screws are provided with all steel silencers.
The absorbent material is acoustic grade mineral fibre with an erosion resistant facing. It is protected and contained by a pre-galvanised perforated steel sheet formed to match the fan diameter.

Cylindrical silencers shall be suitable for air pressures up to a maximum of 1000 Pa. For duct pressures in excess of 1000 Pa please enquire.

A Melinex Lining (variant code M) can be supplied for critically clean applications such as hospitals to ensure no fibre migration. The lining may also be used in moisture or grease laden conditions, such as kitchen extract systems where the material is used to stop the ingress of grease etc. into the acoustic media. The use of the lining also allows the silencers to be low pressure steam cleaned. Some reduction of attenuation due to the lining will be experienced.

Performances

Are derived from tests to BS848. Measurements of fan noise are made with and without the silencer in position. The difference between recorded levels is the dynamic (with airflow) attenuation or insertion loss of the silencer. Type B silencers may be directly coupled to both inlet and outlet flanges of the fan. When type C silencers are directly coupled to the fan flanges they are most effective on the outlet. A spacer duct of 1D length between the fan inlet flange and a type C silencer is necessary to ensure maximum performance. Note: C type silencers mounted close to a fan may effect the aerodynamic performance.

Size Range

Type B silencer bore diameters range from 280 mm to 2000 mm metric range, 6" to 75" imperial range in lengths equal to or twice the bore diameter (1D or 2D) 6" to 9.5" are available in 1.5 D lengths only. Pressure loss for type B silencers is the same as a plain duct.
Type C silencers have a centrally mounted absorbent pod in the airway for increased attenuation. The pressure loss due to the pod is shown on the chart below.
The diameter range is 315 mm to 2000 mm metric range or 12" to 75" imperial range.

Fume Handling

Stainless Steel, PVC or Polypropylene construction is also available for corrosive atmospheres. Please send details of the application with the enquiry.

Marine Use

The construction of standard silencers has been proved satisfactory for use below decks on ships and oil rigs and a specially strengthened design is available for other locations, please enquire.

Temperature Range

Standard silencers are suitable for temperatures from -40°C to 200°C. When moisture resistant lining is used the continuous air handling temperature is limited to 80°C. Special treatments enable silencers to operate at temperatures up to 600°C. For smoke applications, please enquire.

Finishes

Standard finish is galvanised zinc coating to BS2989 Z2. Other finishes including epoxy paint are available to special order.

Mounting

Galvanised steel mounting feet and matching flanges corresponding to those supplied for Aerofoil fans are available.

Resistance to Air Flow Type C Silencer

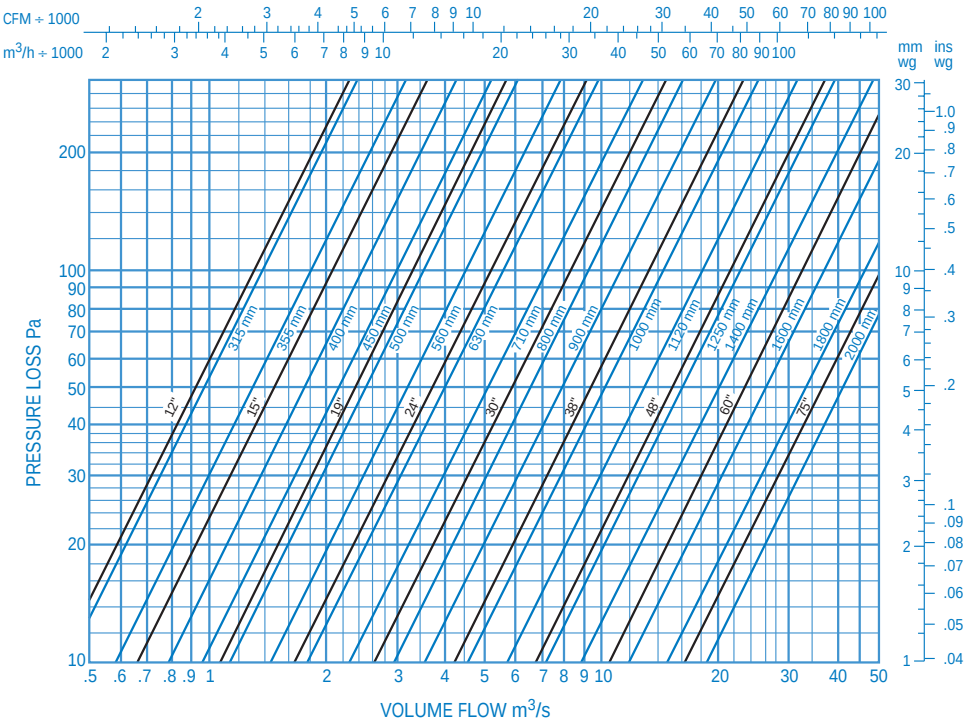

Cylindrical Silencers

Acoustic Performance

Type B Dynamic Attenuation

Imperial

Bore Dia. Ins (D)	Length	Octave-Band Mid Frequencies Hz							
		63	125	250	500	1K	2K	4K	8K
6	1.5D	0	0	1	6	12	9	10	7
7.5	1.5D	0	0	1	7	11	8	9	6
9.5	1.5D	0	0	2	7	11	7	7	6
12	1D	1	2	4	9	11	10	9	7
	2D	1	2	5	11	16	12	11	10
15	1D	2	3	5	10	13	11	9	8
	2D	3	4	7	14	18	15	11	12
19	1D	2	3	6	13	14	10	10	5
	2D	3	4	8	19	18	14	11	10
24	1D	3	5	7	15	13	8	9	8
	2D	4	6	9	19	19	14	13	12
30	1D	3	5	8	16	12	9	9	8
	2D	4	6	10	19	15	12	11	10
38	1D	4	5	11	16	11	10	8	9
	2D	4	6	13	19	13	12	11	11
48	1D	4	6	12	17	10	9	8	7
	2D	5	7	14	19	14	11	11	9
60	1D	5	7	13	16	10	8	7	6
	2D	6	8	15	18	12	10	9	7

Metric

Bore Dia. mm (D)	Length	Octave-Band Mid Frequencies Hz							
		63	125	250	500	1K	2K	4K	8K
280	1D	1	1	2	8	11	8	8	7
	2D	1	2	4	10	13	10	10	9
315	1D	1	2	4	9	11	10	9	7
	2D	1	2	5	11	16	12	11	10
355	1D	1	2	4	10	12	10	9	7
	2D	2	3	6	13	17	14	11	11
400	1D	2	3	5	10	13	11	9	8
	2D	3	4	7	14	18	15	11	12
450	1D	2	3	6	12	13	11	10	6
	2D	3	4	8	17	18	15	11	11
500	1D	2	3	6	13	14	10	10	5
	2D	3	4	8	19	18	14	11	10
560	1D	2	4	7	14	14	9	10	7
	2D	3	5	9	19	18	14	12	11
630	1D	2	5	7	15	13	8	9	8
	2D	4	6	9	19	19	14	13	12
710	1D	3	5	7	15	13	9	9	8
	2D	4	6	9	19	17	13	12	11
800	1D	3	5	8	16	12	9	9	8
	2D	4	6	10	19	15	12	11	10
900	1D	3	5	10	17	13	11	10	8
	2D	4	6	12	19	15	12	11	10
1000	1D	4	5	11	16	11	10	8	9
	2D	4	6	13	19	14	12	11	11
1120	1D	4	5	11	17	11	9	8	8
	2D	4	6	13	19	14	12	11	8
1250	1D	4	6	12	17	10	9	8	7
	2D	4	6	14	19	14	11	11	9
1400	1D	4	6	12	16	10	8	7	6
	2D	4	7	14	18	13	10	10	8
1600	1D	4	7	12	16	10	8	7	6
	2D	4	8	15	18	12	10	9	7

Type C Dynamic Attenuation

Imperial

Bore Dia. Ins (D)	Length	Octave-Band Mid Frequencies Hz							
		63	125	250	500	1K	2K	4K	8K
12	1D	2	5	5	9	18	20	18	15
	2D	2	6	6	12	20	25	20	17
15	1D	2	6	6	10	19	24	20	17
	2D	3	7	8	14	29	29	23	18
19	1D	2	3	8	16	21	22	21	17
	2D	2	4	10	20	29	30	26	20
24	1D	3	5	8	16	19	14	16	12
	2D	5	6	10	19	29	25	21	20
30	1D	4	5	8	16	19	15	14	13
	2D	5	7	10	20	23	21	17	14
38	1D	5	5	11	18	19	14	14	14
	2D	5	6	13	26	24	20	18	16
48	1D	5	8	12	19	17	14	12	10
	2D	5	8	14	25	23	17	17	12
60	1D	5	8	13	17	16	13	11	8
	2D	6	10	17	21	20	17	14	9

Metric

Bore Dia. mm (D)	Length	Octave-Band Mid Frequencies Hz							
		63	125	250	500	1K	2K	4K	8K
315	1D	2	5	5	9	18	20	18	15
	2D	2	6	6	12	20	25	20	17
355	1D	2	5	6	9	18	22	19	16
	2D	2	6	7	13	25	27	21	17
400	1D	2	6	6	10	19	24	20	17
	2D	3	7	8	14	29	29	23	18
450	1D	2	4	7	13	20	23	22	17
	2D	2	5	9	16	29	29	21	20
500	1D	2	3	8	16	21	22	21	17
	2D	2	4	10	20	29	30	20	26
560	1D	3	5	8	16	20	18	19	15
	2D	4	5	10	20	29	28	21	23
630	1D	3	5	8	15	19	16	14	12
	2D	5	6	10	19	29	25	21	20
710	1D	3	5	8	15	19	15	14	12
	2D	5	6	10	20	26	23	18	17
800	1D	4	5	8	16	19	15	14	13
	2D	5	7	11	22	23	21	16	14
900	1D	4	5	9	17	19	15	14	13
	2D	5	7	12	24	23	21	16	15
1000	1D	5	5	11	18	19	15	14	13
	2D	5	7	13	26	24	20	16	16
1120	1D	5	7	11	19	18	14	13	12
	2D	5	8	13	25	23	18	16	13
1250	1D	5	8	12	19	17	14	12	10
	2D	5	8	14	25	17	17	17	12
1400	1D	5	8	12	18	16	13	11	9
	2D	5	9	15	23	22	17	15	10
1600	1D	5	8	13	17	16	13	11	8
	2D	6	10	17	21	20	17	14	9

For sizes above 60" or 1600 mm please enquire.

All performances are derived from tests to BS848.
For increased attenuation use Woods splitter silencers. Attenuation figures shown are typical in-situ Dynamic Performances. For critical applications, particularly high performance fan systems please consult Woods Acoustic Department.

Cylindrical Silencers

Dimensions & Weights

Imperial

Ins.	Imperial - Dimensions (mm)								Weight kg			
Size (D)	OD	No of Holes	PCD	Thread	Mounting Foot Holes		A Length		B		C	
					Dia	Spacing	1D	2D	1D	2D	1D	2D
6	210	4	184	M6	7	130	229*		2.7*		-	
7.5	248	4	216	M6	7	152	286*		3.6*		-	
9.5	298	4	273	M8	9	194	362*		5.0*		-	
12	416	8	349	M8	11	273	305	610	10	16	12	18
15	492	8	425	M10	11	343	381	762	13	22	16	26
19	645	8	541	M12	11	438	483	965	24	39	28	46
24	773	12	668	M12	11	559	610	1219	34	57	39	67
30	926	12	821	M12	14	711	762	1524	51	87	60	102
38	1181	16	1035	M16	14	914	965	1930	79	149	94	172
48	1450	20	1289	M16	14	1143	1219	2540	114	239	133	278
60	1749	12	1626	M16	14	1422	1524	3150	250	529	282	563

Metric

mm	Metric (mm)								Weight kg			
Size (D)	OD	No of Holes	PCD	Thread	Mounting Foot Holes		A Length		B		C	
					Dia	Spacing	1D	2D	1D	2D	1D	2D
280	385	4	320	M8	10	230	280	560	9	14	-	-
315	415	8	355	M8	10	265	315	630	10	17	13	19
355	455	8	395	M8	10	305	355	710	12	20	15	24
400	500	8	450	M10	10	350	400	800	15	25	18	30
450	600	8	500	M10	10	400	450	900	20	33	24	39
500	650	12	560	M10	10	450	500	1000	25	41	29	48
560	710	12	620	M10	10	510	560	1120	30	50	35	58
630	780	12	690	M10	12	580	630	1260	35	61	42	72
710	860	16	770	M10	10	660	710	1420	44	76	53	90
800	1000	16	860	M10	12	750	800	1600	55	96	66	116
900	1100	16	970	M12	12	850	900	1800	70	129	84	150
1000	1200	16	1070	M12	12	950	1000	2000	82	157	100	182
1120	1320	20	1190	M12	16	1070	1120	2342	100	211	118	247
1250	1450	20	1320	M12	16	1150	1250	2602	127	266	147	306
1400	1600	20	1470	M12	16	1300	1400	2902	199	399	220	453
1600	1800	24	1680	M16	16	1500	1600	3302	311	637	362	739

Notes:

1. 6" - 9.5" are 1.5D long
2. For larger sizes please enquire

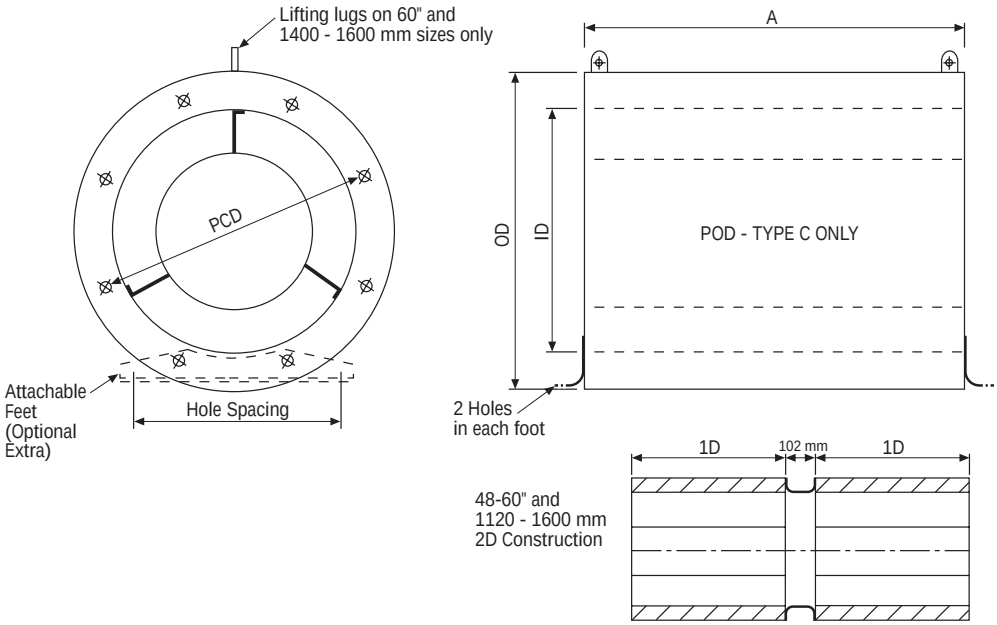

Packing Specification

Protective Boards screwed to ends.
Packed length is Silencer length plus 50 mm.
Packed width and height ⌓ Silencer O.D.

Alternative crated packing

(at extra cost)
Typically:
Packed length is Silencer length plus 150 mm.
Packed section is square.
Side dimension is Silencer O.D. plus 200 mm.

Splitter Silencers

Types WS-WSY-WBS

- Choice of drilled RSA or cleat type flanges
- Higher attenuation patented bend type
- Galvanised steel construction
- Mineral fibre splitter infill
- Erosion resistant to airflow
- Optional moisture resistant lining
- Low resistance to airflow
- Various materials and constructions available
- Fully tested high temperature models available
- Fully metric range

Casing

Lock formed pre-galvanised steel sheet. Flanges of rolled steel angle hot dip galvanised drilled for duct connection or, formed flanges of pre-galvanised steel strip suitable for cleat fixing (Code WSY). Alternatively spigot ends can be provided, please enquire. All welded cases are available for duct pressures between 1000 and 3000 Pa (Variant code P).

Splitters

Frames are formed from pre-galvanised sheet steel. Absorbent material is resin bonded mineral fibre, in slab form with erosion resistant facing. A melinex lining (Variant Code M) can be supplied for critically clean applications, such as hospitals to ensure no fibre migration. The lining may also be used in moisture or grease laden conditions, such as kitchen extract systems where the material is used to stop the ingress of grease etc. into the acoustic media. The use of the lining also allows the silencer to be low pressure steam-cleaned. Some reduction in attenuation due to the lining will be experienced. Splitters are normally mounted vertically in casing. For horizontal splitters please enquire.

Performances

Data is derived from tests to BS4718 1971. Measurements of a noise source are made with and without the silencer in position. The difference between the recorded levels is the static (without airflow) attenuation or insertion loss of the silencer.

Standard widths (inside duct)					
Airway Width mm	No Modules				
	1	2	3	4	5
50	250	500	750	1000	1250
75	275	550	825	1100	1375
100	300	600	900	1200	1500
150	350	700	1050	1400	1750

Size Range

Standard heights (inside duct): 300-1500mm in 150mm increments. Standard lengths: 600-2400mm in 300mm increments. Larger silencers are supplied in sections to be fixed together on site. Silencers can be manufactured in dimensions to suit any applications, please discuss with acoustic department.

Fume Handling

For mildly corrosive atmosphere epoxy paint is available (Variant code K). Where this finish is not sufficiently corrosion resistant many sizes can be supplied constructed in PVC of polypropylene.
Please enquire giving details of the application.

Temperature Range

WS, WSY, WBS	-40° to + 200° C
Melinex Lining (M)	-40° to + 80° C
High Temperature (T)	-40° to + 400° C
PVC	-40° max.
Polypropylene	-60° max.

Low Pressure Loss

Inlet and outlet fairings (Variant code L) fitted to the splitters reduce pressure losses by 25%. The silencer casing length is increased by 300mm to accommodate the fairings.

90° Bend Type Silencers

Type WBS is a modified splitter silencer with integral air turning vanes to keep pressure losses to a minimum.

Additional attenuation can be obtained (see table B) together with compactness in plant room layout.

Selection of Type WS/WSY Silencers

Step No.

1) Calculate attenuation required preferably using the method detailed in Woods electronic selection programme 'Design for Sound' (See Woods Acoustic Group).
2) Use Table A to select the airway width and length of silencer.
3) Select width, height and pressure loss from the appropriate pressure loss chart Nos 1-4.
4) Check that the silencer airway velocity is low enough for required NC level

Example 1.

- Air volume flow rate = 1.42m³/s

Octave band mid freq. Hz:	63	125	250	500	1K	2K	4K	8K
Required attenuation from calculation:	6	14	26	42	48	46	40	28
Select from table A-WS/100-1500	8	15	26	43	53	53	45	32

- The fan has 100 Pa static pressure available for silencer pressure loss.
- The NC level required is NC35 from which Table C limits the silencer airway velocity to 13m/s.
- From standard widths and heights a suitable WS/100 silencer would be 600 mm wide x 600 mm high.
- Pressure loss from chart 3 = 65Pa
- Silencer airway velocity

$$= \frac{\text{Volume Flow } (m^3/s)}{\text{No of A/W x AW width x Height (metres)}}$$

$$= \frac{1.42\ (m^3/s)}{2 \times 0.1m \times 0.6m}$$

$$= 11.83\ m/s$$

- Silencer coding would be:-

WS 100-1500-600-600

Type
Airway width
Silencer Length
Width
Height

For Bend Silencer selections please refer to Woods Acoustic Department

Splitter Silencers

Coding: Type WS/WSE Silencers

Code

WS Drilled Flanges (with Side Liners)
WSY Cleat Flanges (with Side Liners)

Variant
- M Moisture Resistant Lining
- L Low Pressure Loss
- P High System Pressure
- K Fume Resistant
- C Perforated Linings
- CC Stainless Perforated Linings

Example

WSY LM/75-X-X-X

- Type
- Variants
- Airway Width mm
- Silencer Length mm
- Width mm
- Height mm

Figure 1

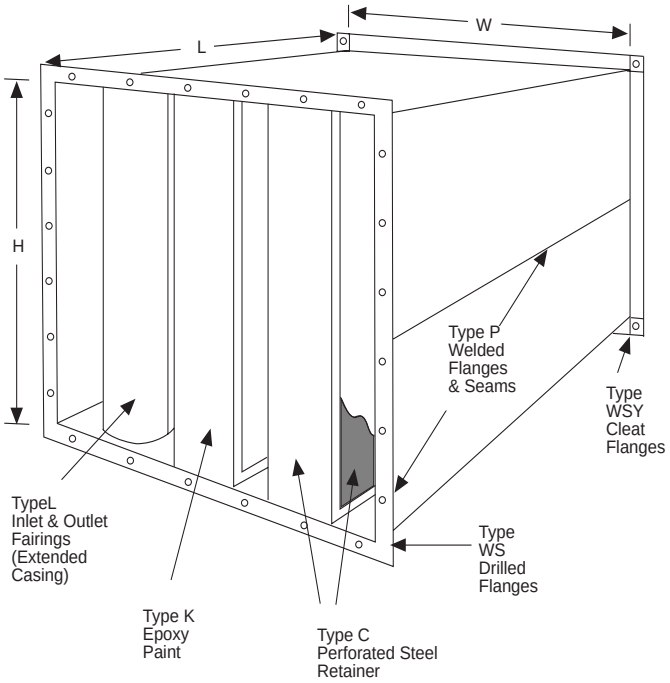

Coding: Type WBS Silencers

CODE WBS (H or V)
Plus Variants
as for type WS

H or V = Bend in Horizontal or Vertical Plane

Example

WBS (H) or (V) M/75-X-X-X-X

- Type
- Variants
- Airways Width mm
- Air Entry leg Dimension L_1 mm
- Air exit leg Dimension L_2mm
- Silencer Width mm
- Height mm

Figure 2

Type WBSV

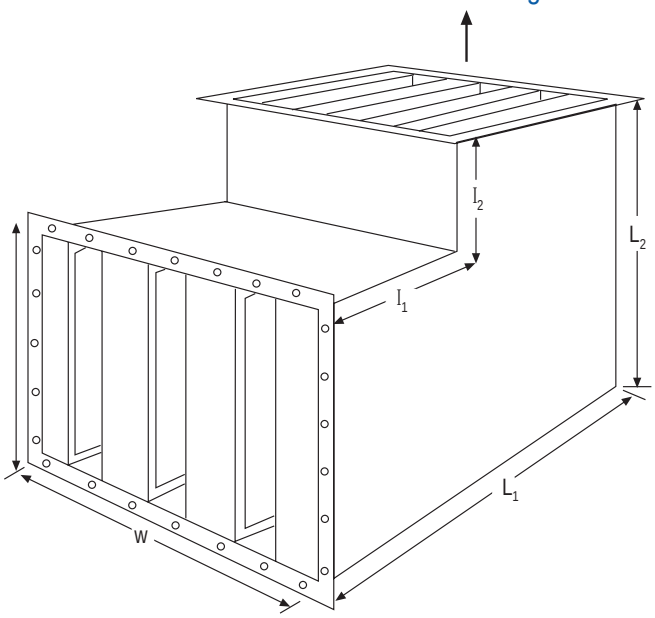

Type WBSH

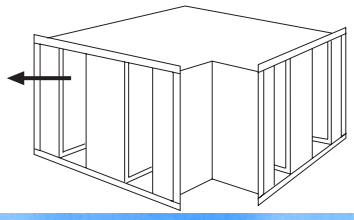

l_1+l_2 Minimum Dimension 100mm
(300mm fairings Type WBSHL)

Splitter Silencers

Performance

Type WS/WSY
Intermediate airway widths can be provided to suit individual requirements. Please enquire.
Care should be taken in use of 50mm Airway Silencer. Perforated Linings are required on airways of 75mm or less. Please enquire.

The following airway velocities should not be exceeded for the ventilation space noise levels tabulated, in order to avoid possible noise regeneration in the silencer.

Airway Velocity=

$$\frac{\text{Volume Flow Rate } m^3/s}{\text{Number of Airways x Airway Width X Height (metres)}}$$

TABLE C

Velocity m/s	NC/NR Level
15	45-50
13	35-40
10	30

For special applications please enquire.

Table A

Airways mm	Length mm	Octave Band Mid Frequencies Frequency Hz 63	125	250	500	1K	2K	4K	8K
50	600	6	12	22	31	40	40	40	30
	900	8	16	27	45	55	55	55	50
	1200	10	20	36	55	55	55	55	55
	1500	13	24	42	55	55	55	55	55
	1800	15	30	51	55	55	55	55	55
	2100	17	34	55	55	55	55	55	55
	2400	19	38	55	55	55	55	55	55
75	600	5	8	11	24	31	32	24	20
	900	6	11	19	34	45	45	39	28
	1200	7	14	26	46	55	55	52	38
	1500	9	17	30	48	55	55	55	42
	1800	10	20	34	50	55	55	55	46
	2100	12	23	40	55	55	55	55	55
	2400	13	24	45	55	55	55	55	55
100	600	4	7	11	21	31	29	21	20
	900	5	9	16	30	39	39	31	26
	1200	6	12	23	40	51	51	41	29
	1500	8	15	26	43	53	53	45	32
	1800	9	17	30	47	55	55	49	36
	2100	11	20	35	55	55	55	55	43
	2400	12	23	40	55	55	55	55	47
150	600	2	5	8	12	15	15	11	7
	900	3	6	11	20	25	25	15	8
	1200	4	7	15	26	33	33	19	11
	1500	5	9	18	33	41	41	24	13
	1800	6	11	22	39	49	49	29	16
	2100	7	13	26	45	55	55	34	19
	2400	8	15	30	52	55	55	39	21

Type WBS

The value of additional attenuation due to the mitred bend should be deducted from the attenuation required.

To obtain the attenuation, dimensions L_2+I_2 must be equal or greater than 2.5 x height for Type WBSV or 2.5 width for Type WBSH.

Table B

Silencer Height for WBSV or width for WBSH	Additional Attenuation in Octave Bands Hz 63	125	250	500	1K	2K	4K	8K
300	0	0	2	8	6	3	3	3
450	0	1	5	7	4	3	3	3
600	0	2	8	6	0	3	3	3
750	0	3	8	5	0	3	3	3
900	0	5	7	4	0	3	3	3
1050	0	7	7	4	0	3	3	3
1200	1	8	6	4	0	3	3	3
1350	2	8	6	3	0	3	3	3
1500	3	8	5	3	0	3	3	3

Splitter Silencers

To aid selection, the charts 1-4 show the maximum pressure drop allowable to maintain the NC/NR levels required.

Chart 1 - Resistance to Air Flow Type WS/50

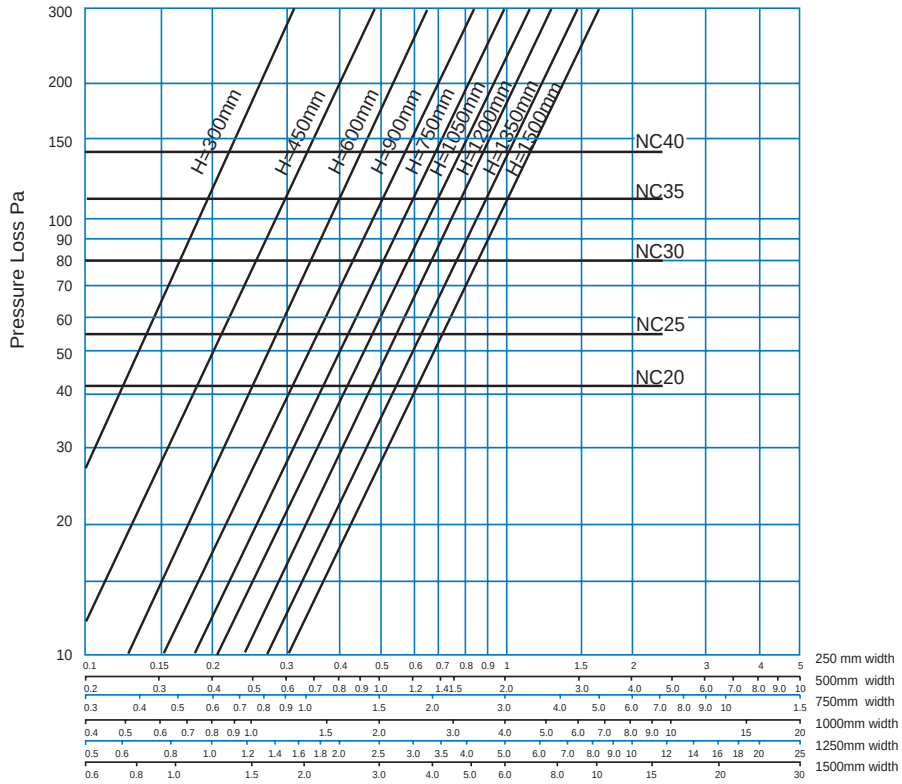

Chart 2 - Resistance to Air Flow Type WS/75

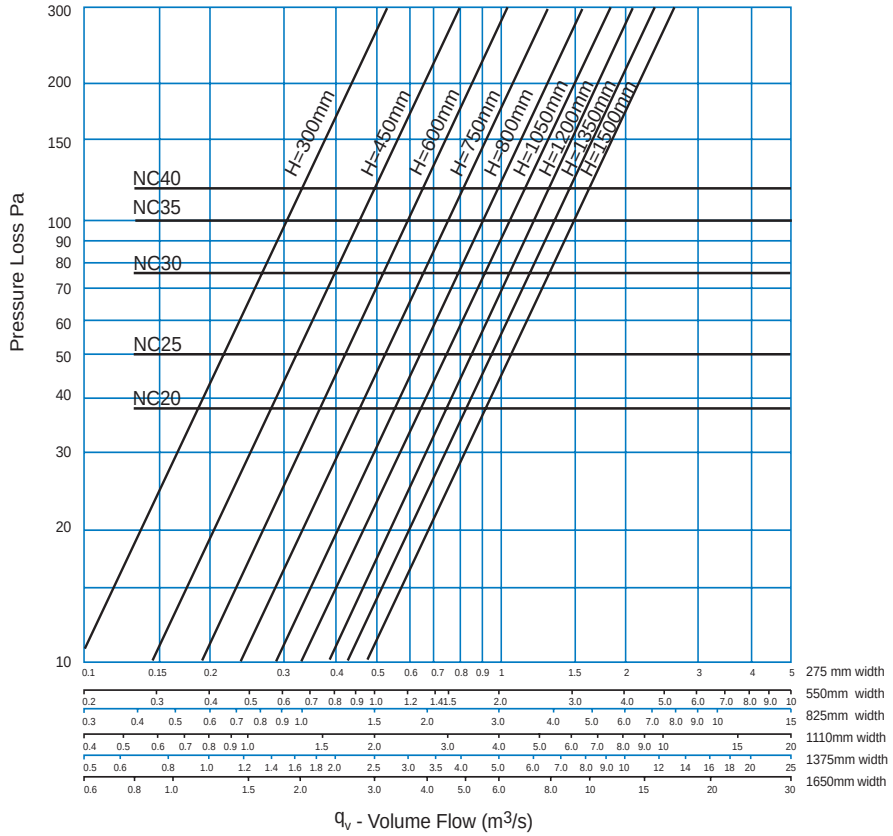

Note: Type WBS pressure loss is 30% higher. Type variant L pressure loss is 25% lower.

Chart 3 - Resistance to Air Flow Type WS/100

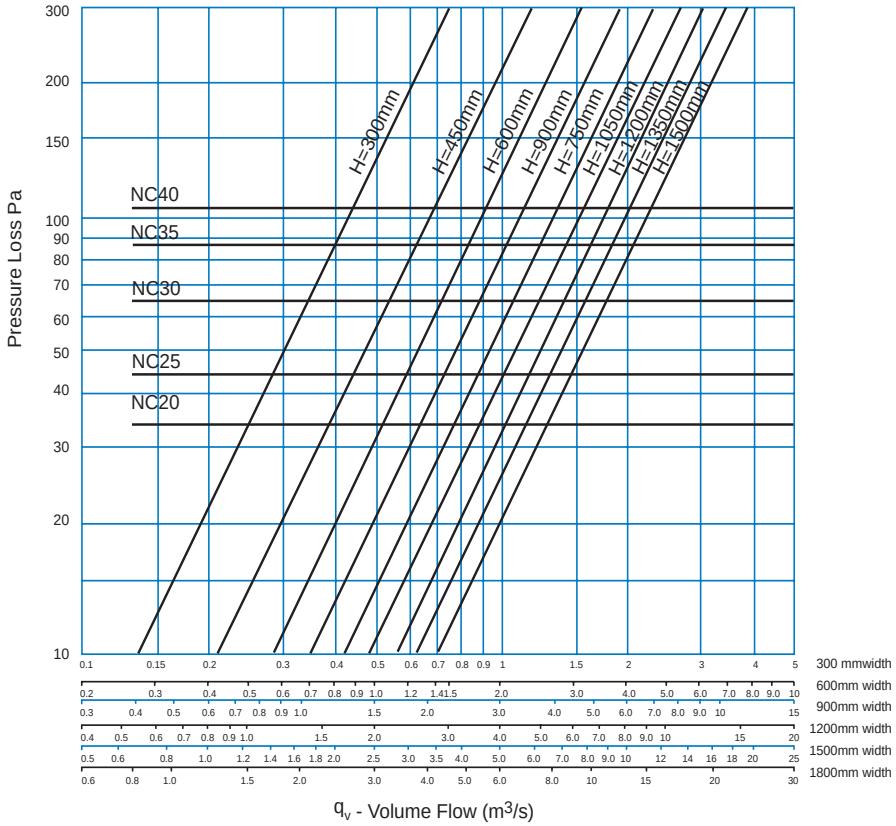

Chart 4 - Resistance to Air Flow Type WS/150

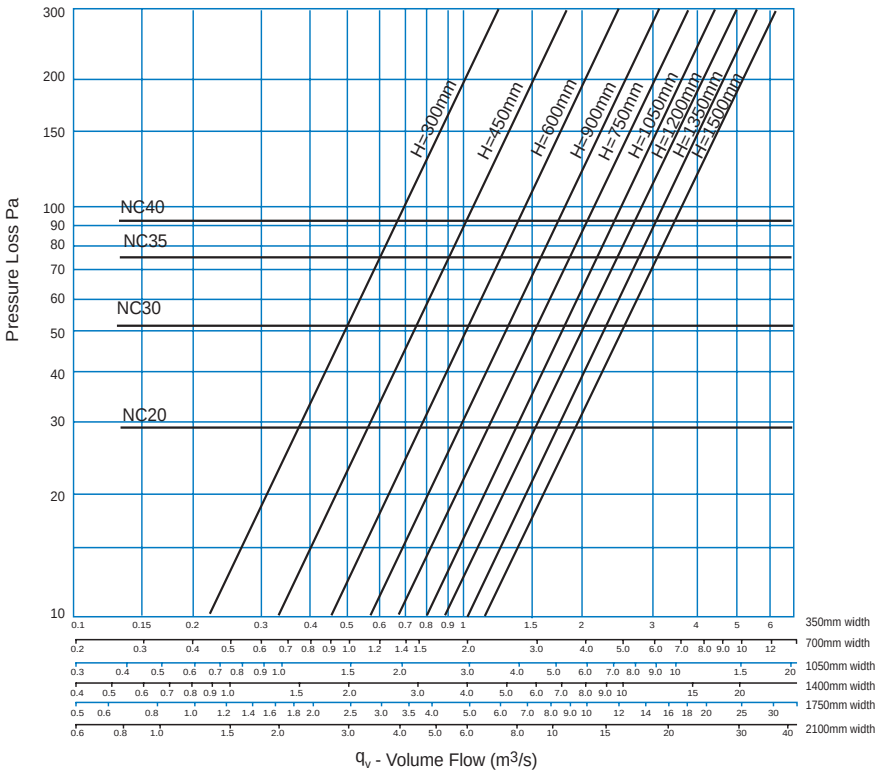

Note: Type WBS pressure loss is 30% higher. Type Variant - L pressure loss is 25% lower.

Splitter Silencers

Dimension & Weights

TYPE WS/WSE/150mm AIRWAY

Number of Modules	Height B mm	Approx. Weight in Kg for length below			
		900 mm	1200 mm	1500 mm	1800 mm
1	300	26	32	39	44
	450	32	39	48	55
	600	37	46	56	64
2	300	44	54	65	75
	450	51	62	79	91
	600	58	73	90	103
	750	70	86	106	120
	900	78	96	118	133
	1050	92	113	138	154
3	450	76	91	117	133
	600	85	106	131	149
	750	102	125	153	172
	900	112	137	168	189
	1050	121	149	184	207
	1200	130	161	199	223
	1350	156	184	222	253
	1500	170	205	243	282
4	600	106	133	166	189
	750	128	157	193	218
	900	140	171	212	239
	1050	150	185	230	260
	1200	160	199	249	280
	1350	192	235	294	331
	1500	203	247	313	353
5	900	168	206	255	288
	1050	179	223	277	312
	1200	191	239	298	336
	1350	230	281	353	399
	1500	242	296	375	423

Note; A and B are internal casing dimensions.

Dimension 'A' = (Airway width + 200) x No. of modules
Flange widths 'E" are as follows:
Longest side up to 900mm - flange width E = 40mm.
Longest side above 900mm - flange width E = 50mm.
Dimension 'J'
= Dim. 'B" = 50mm when dim. 'E' = 40mm
= Dim. 'B' = 60mm when dim. 'E' = 50mm
Dimension 'K'
= Dim. 'A' = 50mm when dim. 'E' = 40mm
= Dim. 'A' = 50mm when dim. 'E' = 50mm

Fixing hole pitches 'F' are in all cases 150mm, clearance holes for M10 screws. N must not be less than 50mm.

$$\text{Number of Modules} = \frac{\text{width}}{\text{Airway size} + 200\text{mm}}$$

Example: WS/100-900-600-600

$$\text{Number of Modules} = \frac{600}{100 + 200} = 2 \text{ Modules}$$

Other Acoustic Products

Type WSO (splitters only) can be tailored made to fit into builders work ducts and shafts.

Roof unit silencers (Acoustic curbs)
Acoustic Lourves.
Acoustic Jackets for Fans.

Dimensions

Types WS and WBS silencers

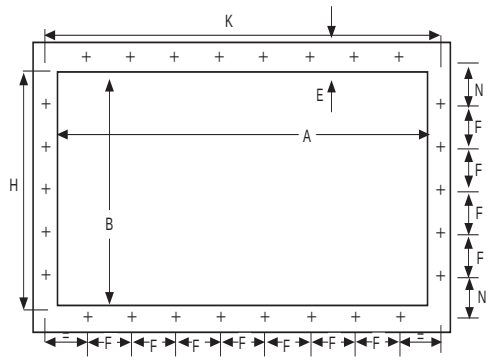

Type WSY Silencer Cleat Flange

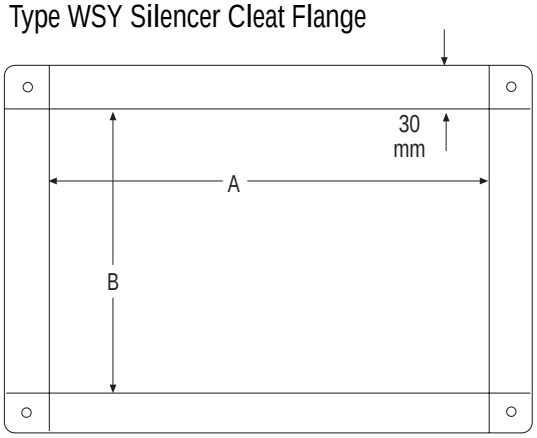

We Bring Air to Life

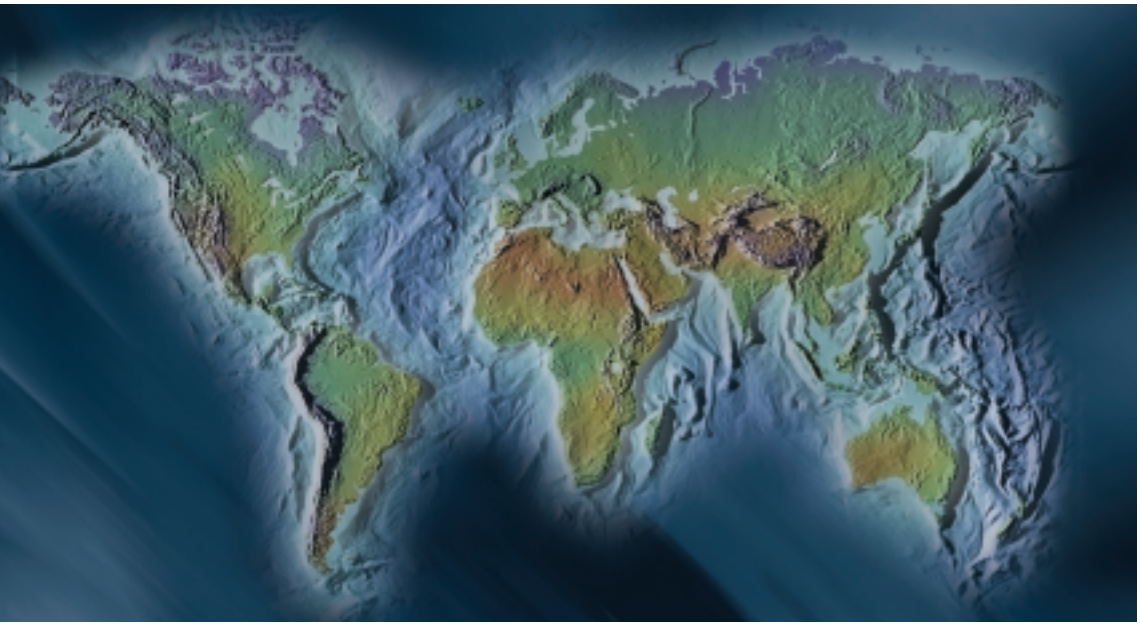

Fläkt Woods Group provides a full range of products and solutions for buildings ventilation, air treatment and industrial air movement

Head office

Fläkt Woods Group Ltd
Affolternstrasse 40
8050 Zürich
Tel: +41 43 288 38 00
Fax:+41 43 288 38 10
Email: info@flaktwoods.com

Sales Offices available World Wide - See our website for details

www.flaktwoods.com

Due to a policy of continuous development and improvement the right is reserved to supply products which may differ from those illustrated and described in this publication. Certified dimensions will be supplied on request on receipt of order. PC/Corp July 04

FläktWoods

DDJRG/0704/FW6089