Project/Task No. 16736/02 Scale: AS SHOWN ORIGINAL DRAWING SIZE A1

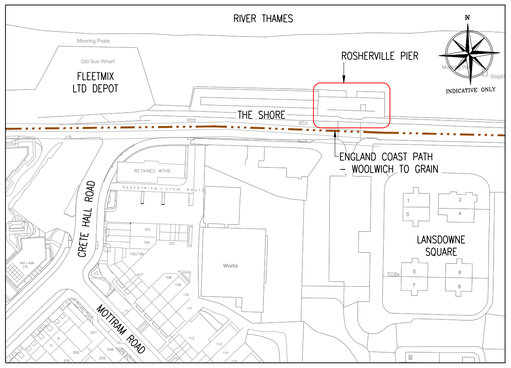

LOCATION PLAN
(1:1250)

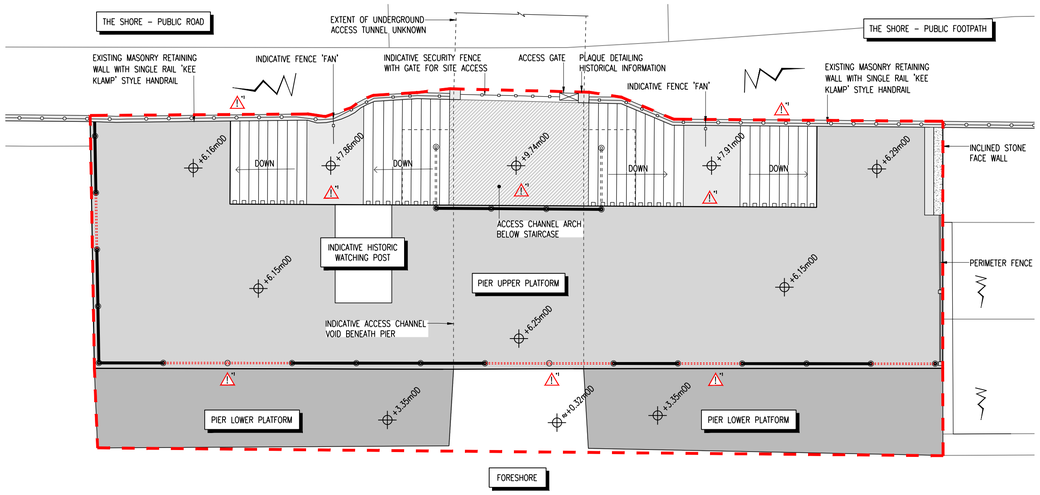

BLOCK PLAN
(SHOWING PIER STRUCTURE)
(1:100)

PHOTO 1
(SHOWING CURRENT CONDITION OF PIER WITH GRAFFITI, VEGETATION GROWTH AND DAMAGE TO WALL & STEPS)
(NTS)

1. GENERAL

(i) This drawing is not to be scaled, work to figured dimensions only, confirmed on site.

(ii) This drawing is to be read in conjunction with all relevant architectural drawings, detailed specifications where applicable and all associated drawings in this series.

(iii) Any discrepancy on this drawing is to be reported immediately to the partnership for clarification.

(iv) The contractor is responsible for all temporary works and for the stability of the works in progress.

(v) All Levels to Ordnance Datum. LAT= –3.12mOD which is approximately equal to Chart Datum.

(vi) All tidal levels are to PLA Tide Tables for Tilbury:

Lowest Astronomical Tide (LAT)	–3.12mOD	+0.00mCD
Mean Low Water Spring (MLWS)	–2.56mOD	+0.56mCD
Mean Low Water Neaps (MLWN)	–1.61mOD	+1.51mCD
Mean High Water Neaps (MHWN)	+2.29mOD	+5.41mCD
Mean High Water Springs (MHWS)	+3.44mOD	+6.56mCD
Highest Astronomical Tide (HAT)	+3.93mOD	+7.05mCD

(vii) Bathymetric information based on PLA Chart Number 335 'River Thames Gravesend Reach (Upper)'

PRELIMINARY SCOPE OF WORKS

ITEM	LOCATION	DESCRIPTION OF WORKS
1	PERIMETER OF UPPER PLATFORM	REINSTATEMENT/REPLACEMENT OF ALL MISSING HANDRAIL SECTIONS (12NO. RAILS + 2NO. POSTS ACROSS 7NO. BAYS, SEE DRAWING 0001 FOR SPECIFIC POSITIONS.)
2	PERIMETER OF UPPER PLATFORM	BLAST CLEANING AND REPAINTING OF EXISTING HANDRAIL SECTIONS (DETAILS TBC)
3	BACK WALL	REMOVAL OF GRAFFITI AND REPOINTING OF STONEWORK AS REQUIRED
4	STEPS	REMEDIATION OF STEPS AND INSTALLATION OF NEW HANDRAIL (DETAILS TBC)
5	SITE WIDE	REMOVAL OF VEGETATION & DEBRIS

LEGEND

- SITE BOUNDARY
- PUBLIC RIGHT OF WAY

UNPROTECTED EDGES

*1 MULTIPLE EDGES WITHOUT SUFFICIENT EDGE PROTECTION PRESENTING FALL FROM HEIGHT RISK.

2.5 m 1:50: 0, 0.5m, 1m, 1.5m, 2m, 2.5m

5 m 1:100: 0, 1m, 2m, 3m, 4m, 5m

50 m 1:250: 0, 12.5m, 25m, 37.5m, 50m, 62.5m

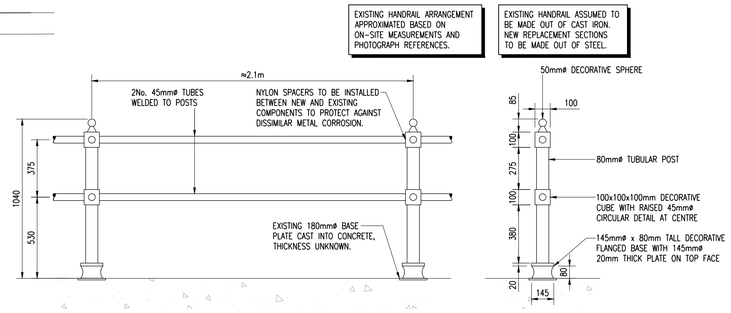

DETAIL A
(TYPICAL UPPER PLATFORM PERIMETER HANDRAIL)
(1:20)

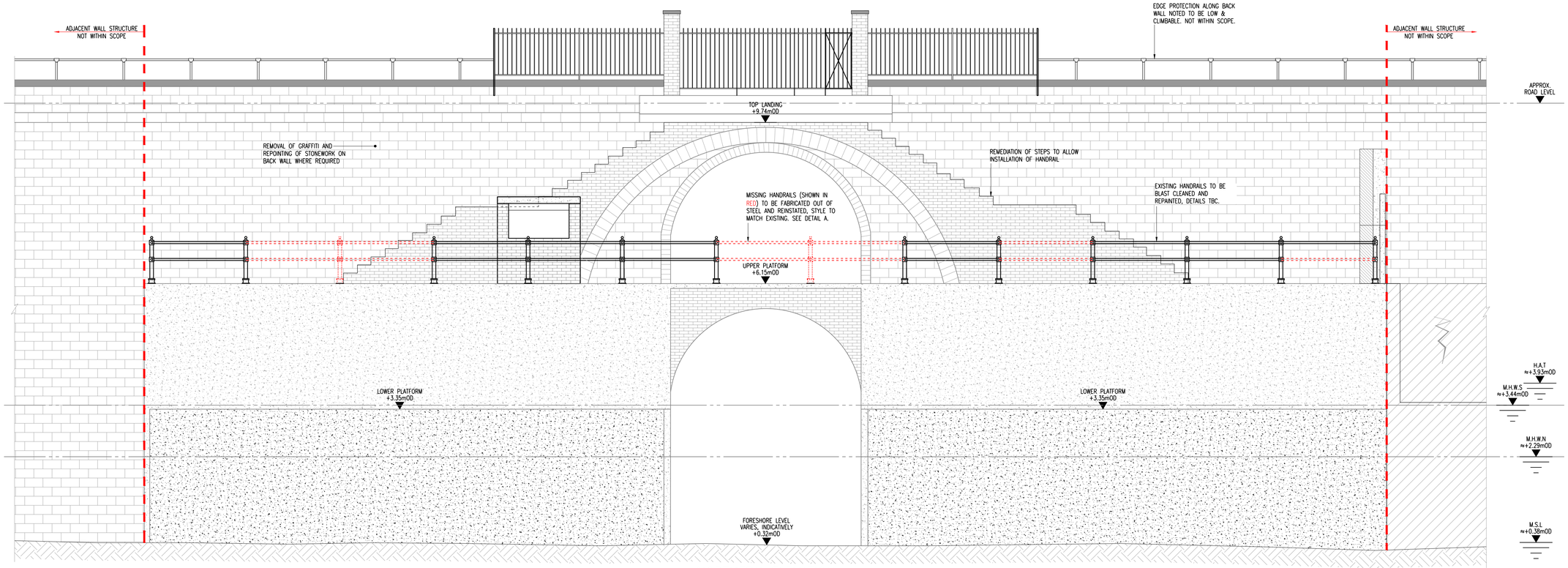

NORTHERN ELEVATION
(LOOKING SOUTH)
(1:50)

ISSUED FOR INFORMATION	OE	JT	18.11.25	P3
ISSUED FOR INFORMATION	OE	JT	06.11.25	P2
ISSUED FOR INFORMATION	OE	JT	06.06.25	P1
Description	By	Aprvd.	Date	Rev.

ISSUED FOR INFORMATION

Title
ROSHERVILLE PIER
PROPOSED REPAIR WORKS

Project
ROSHERVILLE PIER
NORTHFLEET RIVERSIDE

Client
KEEPMOAT HOMES Ltd

HOP
CONSULTING CIVIL AND STRUCTURAL ENGINEERS
HOP House, 41 Church Road
Hove, East Sussex BN3 2BE
www.hop.uk.com
ask@hop.uk.com
+44 (0)1273 223900

Drawing No. 16736-HOP-02-XX-D-S-0002 Status S2 Rev. P3

© Copyright

1:20 0 0.2m 0.4m 0.6m 0.8m 1m
1:50 0 0.5m 1m 1.5m 2m 2.5m
1:100 0 1m 2m 3m 4m 5m

P:\PROJECTS\16736 Keepmoat Homes, Northfleet Riverside\Drawings\HOP\task 2 – Roshervile Pier\16736-HOP-02-ZZ-D-S-0002 Proposed Repair Works Oliver Etheridge