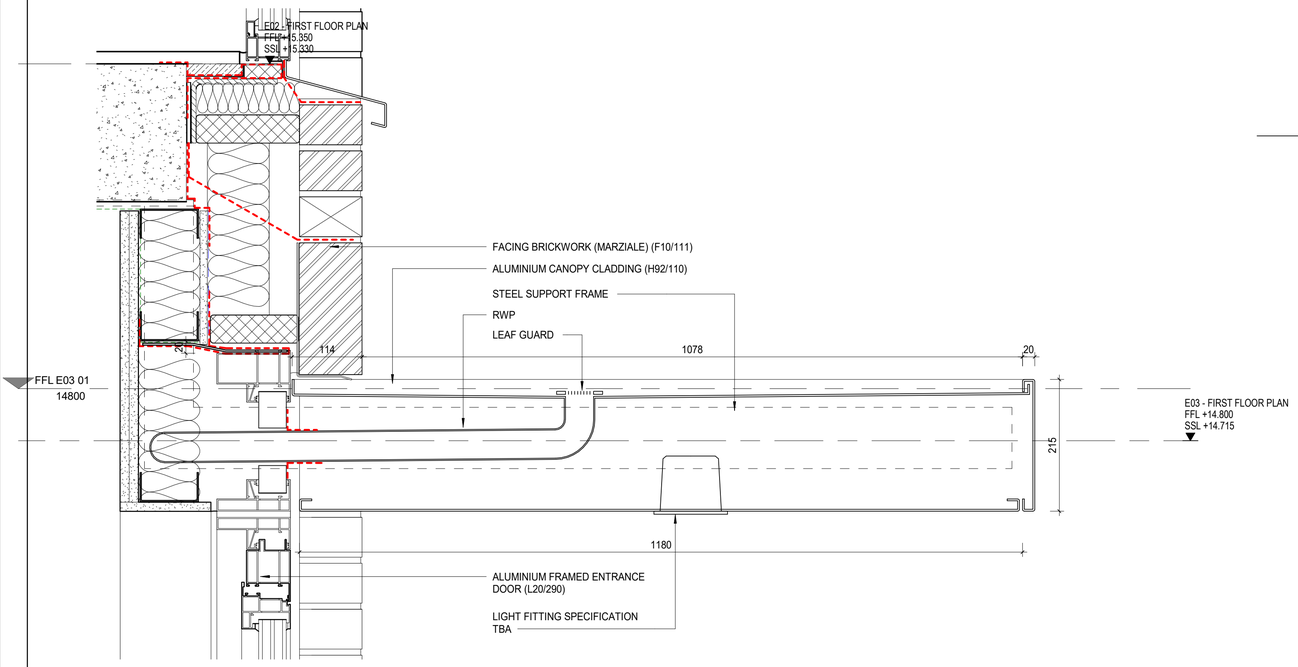

1 E02 CANOPY SECTION DETAIL
1 : 5

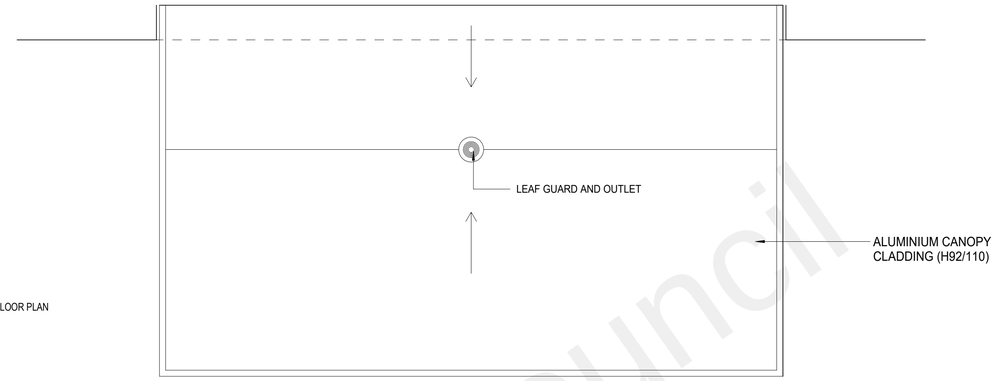

4 E02 CANOPY 02 PLAN
1 : 10

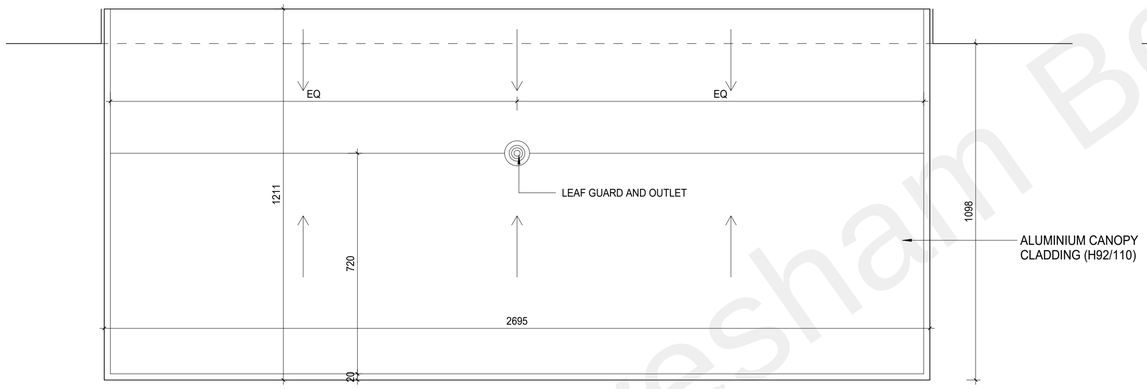

2 E02 CANOPY 01 PLAN
1 : 10

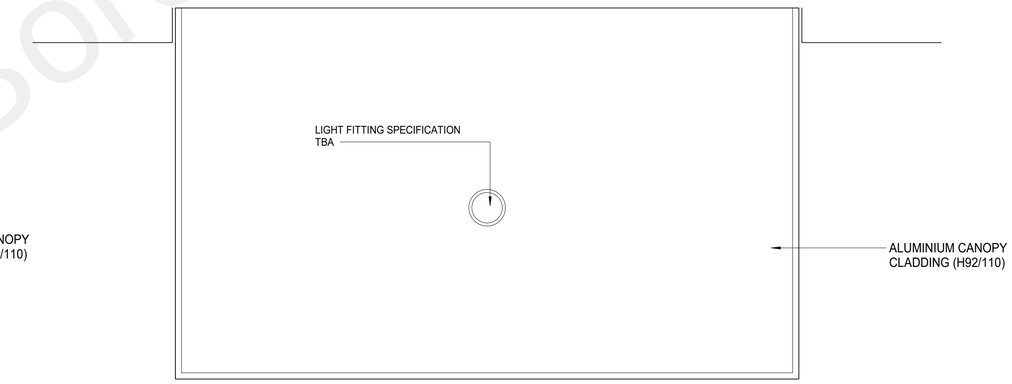

5 E02 CANOPY 02 SOFFIT PLAN
1 : 10

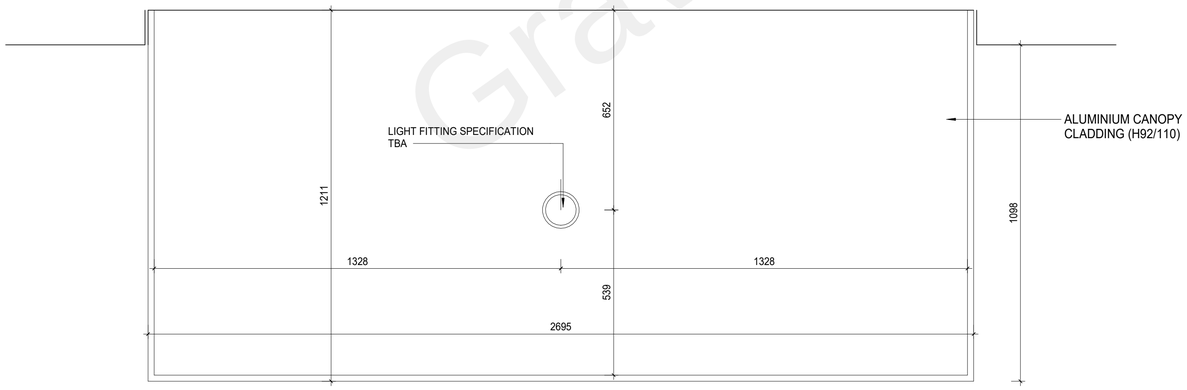

3 E02 CANOPY 01 SOFFIT PLAN
1 : 10

SCALE BAR SHOWING SCALE 1:5

0 0.1m 0.2m 0.3m 0.4m 0.5m

SCALE BAR SHOWING SCALE 1:10

0 0.2m 0.4m 0.6m 0.8m 1m

0.1m 0.3m 0.5m 0.7m 0.9m

DRAWINGS RECORD

REV	DATE	COMMENTS	REV BY	CHK BY
C01	18/12/2020	CONSTRUCTION ISSUE	LP	BT
C02	26/08/2021	SCALE BAR ADDED	JI	LDP
C03	09/09/2021	SCALE BAR ADDED	JI	LDP

N

SIGNIFICANT HEALTH AND SAFETY RISKS (UNUSUAL AND DIFFICULT TO MANAGE ONLY)

It is assumed that all works will be carried out by a competent contractor working, where appropriate, to an approved method statement.
In addition to the hazards/risks normally associated with the types of work detailed on this drawing, note the following:

DO NOT SCALE OFF THIS DRAWING

This scheme is subject to town planning and all other necessary consents.

Dimensions, area and levels where given are only approximate and subject to site survey. All dimensions are to be checked on site. Any discrepancies or variations are to be reported to the architect before work commences. Figured dimensions only are to be taken from this drawing.

This drawing is to be read in conjunction with all relevant consultants and / or specialists drawings / documents and any discrepancies or variations are to be reported to the architect before the affected work commences.

Magnetic media does not constitute contract documentation and updates of this data will occur. These files are current as of the date of issue. Your use of the content of these files is at your own risk. Reference should always be made to the hard copy which is superior to the digital format. Any document produced by yourselves which contains part or all of this data remains your responsibility and attributed to yourselves. Whilst Leslie Jones make every effort to ensure that it is scanned for viruses, we cannot guarantee that it does not contain any.

STAGE 4 / 5 ISSUE

Client
REEF ESTATES LTD

Consultants
HENRY, G&T, EDC, MANHIRE, WATERMAN, HED, 1ST LINE DEFENCE, BB7

leslie jones architecture
Suite 3.02
Grand Union Studios
332 Ladbroke Grove
London W10 5AD
T: 020 7255 1150
F: 020 7255 6700
E: admin@leslie-jones.co.uk

Job Title
THE CHARTER
RIBA STAGE 4/5

Project Number 3732

Drawing Title
E02 CANOPY COMPONENT DRAWING

As indicated @A1 12/18/20 JR LP

project	originator	volume	level	type	role	number
3732 -	LJA -	E02 -	00 -	DR -	A -	21205

suitability: code description:
A5 CONTRACTUAL ISSUE

revision: code description:
C03 SCALE BAR ADDED

09/09/2021 11:41:23

C:\Users\lihari\Documents\3732-LJA-XX-XX-M3-A-0003-E02_STAGE 4_zeynel.lihari@leslie-jones.co.uk.rvt

Gravesham Borough Council