Note
In areas prone to high moisture content use moisture resistant plasterboard such as british gypsum gyproc, with water repellant additives in core and paper lining. Board to comply with EN 520 : 2004

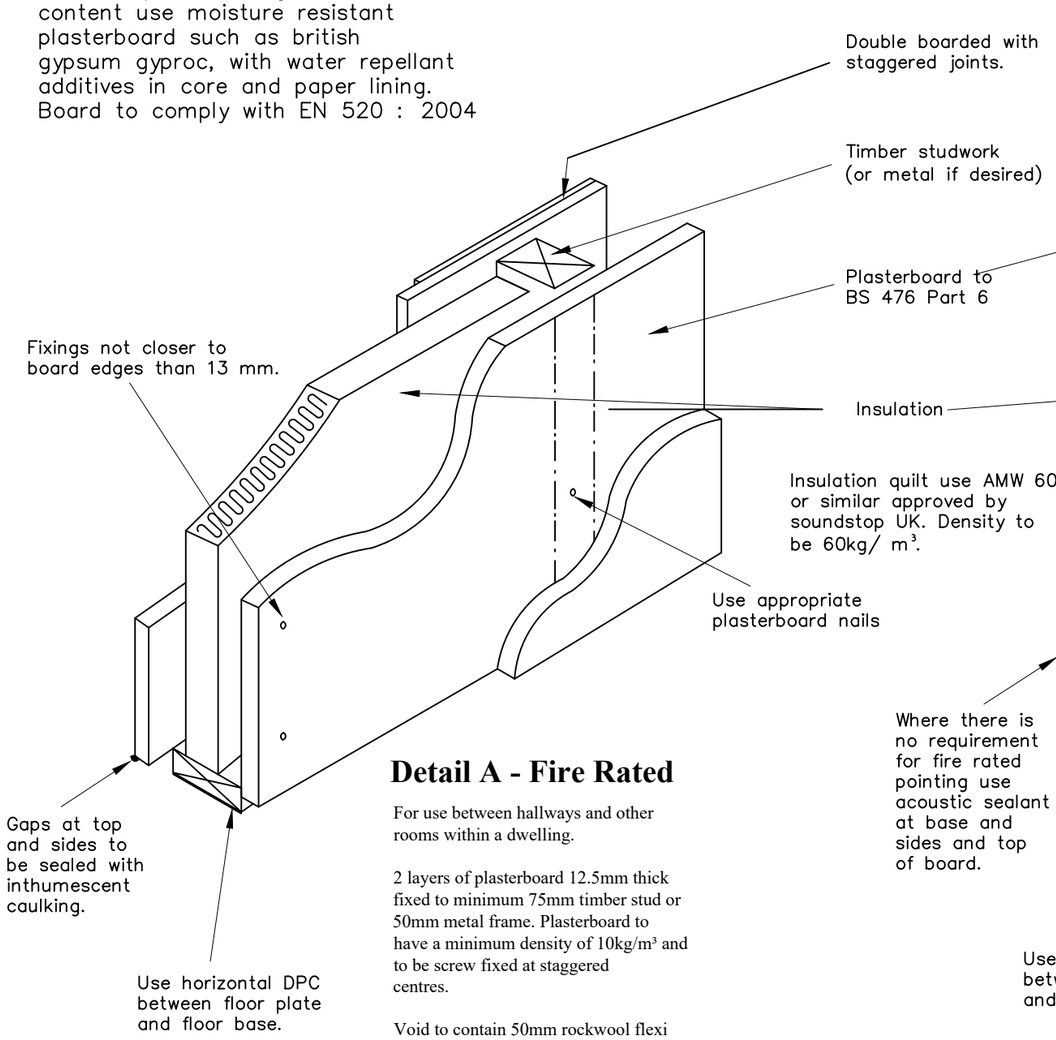

Detail A - Fire Rated

For use between hallways and other rooms within a dwelling.

2 layers of plasterboard 12.5mm thick fixed to minimum 75mm timber stud or 50mm metal frame. Plasterboard to have a minimum density of 10kg/m³ and to be screw fixed at staggered centres.

Void to contain 50mm rockwool flexi sound insulation wire reinforced as required and having a minimum density of 50kg/ m².

Wall to run continuously up to underside or floor above. I.E not terminate at suspended or false ceiling level.

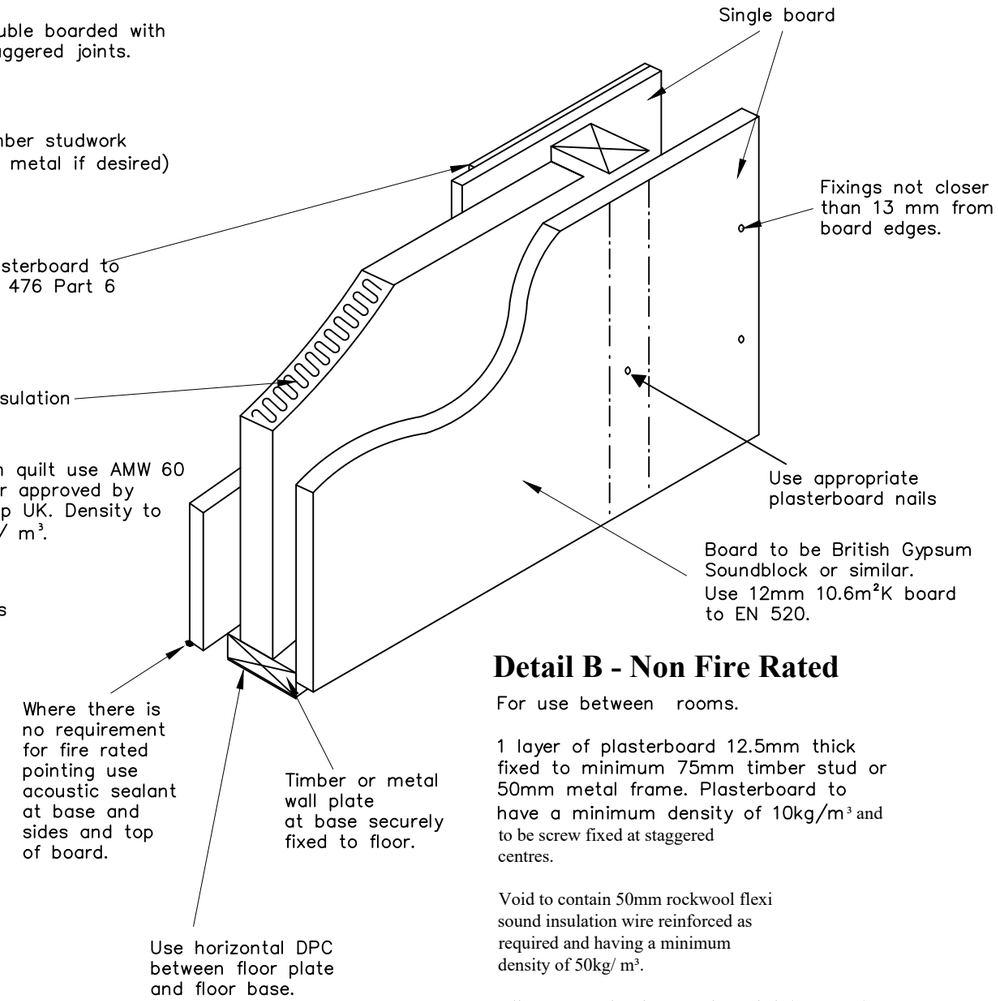

Detail B - Non Fire Rated

For use between rooms.

1 layer of plasterboard 12.5mm thick fixed to minimum 75mm timber stud or 50mm metal frame. Plasterboard to have a minimum density of 10kg/m³ and to be screw fixed at staggered centres.

Void to contain 50mm rockwool flexi sound insulation wire reinforced as required and having a minimum density of 50kg/ m³.

All gaps around perimeter to be sealed. (see notes)

Wall and plasterboard cladding to run up to underside of ceiling.

ANY CHANGES FROM APPROVED DRAWINGS ARE THE RESPONSIBILITY OF CLIENT/CONTRACTOR – PLEASE READ CLAUSED BELOW BEFORE WORKS COMMENCE

Any dimensions taken from this drawing should be cross checked on site and approved prior to any construction works. The contractor shall be responsible for taking all necessary site dimensions and levels and for all exploratory works to verify any existing structure before commencement of works. The contractor will be responsible for all the correct setting out and temporary supports of works on site to property and neighbouring properties

No liability taken of any kind is accepted by Architect for any error or omission Where new work is near/on boundary line/party wall the property owner is to serve party wall notice to the adjoining property/land owner in accordance with the requirements of the 'Party Wall etc.' Act 1996

Contractor responsible for notifying of Building Control Surveyor of each stage of works and ensure inspections have been made. All details to comply with current building regulations and Building Control Approval. Work not to commence until approval of plans by Building Control Body. Any works that commence before Building Regulations drawings have been approved is responsibility of client.

After confirmation from local authority that prior approval is not required, proposed extension must comply with all permitted development criteria set out under the General Permitted Development Order 1995

Any development carried out without Permitted Development Certificate is at owner's own risk. It is strongly advised that a Permitted Development Certificate/Certificate of Lawfulness is sought prior to commencement of any works

FD30 — FD30
All habitable room doors to be replaced with FD30 doors with 38x25mm Door Stops and 3 No Stainless Steel Hinges.
Middle Hinge to be installed at least ⅔ of way up door frame

SD — Mains powered with battery back up interlinked smoke detector to be installed within at least 7.5m of all habitable rooms and at least 30cm from any light fitting or wall

HD — Mains powered and interlinked operated heat detector with battery back up

Ex — Extractor fan for shower room – 15l/s and Kitchen 30l/s to be taken through to run and expel externally

For Structural Steelwork refer to Structural Engineer's Drawing. Beams indicated by red dashed lines (see right)

All Steel work to be encased in 2 layers of FireLine Board with staggered joints or fire resisting intumescent paint in accordance with manufacturer's guidance to provide minimum 60min fire resistance
All Steel work to only be ordered once contractor has confirmed dimensions on site and positioning with client. Any discrepencies noted to be discussed with Surveyor prior to ordering any steel work. No responsibility taken by Surveyor for steels ordered to match site conditions

A-Z Building Services

A: Addlestone KT15
E: hthuseyin0809@msn.com

T: 07969925562

SUBJECT TO Approval

CLIENT	PROJECT	DRAWING	STAGE
Mr and Mrs SMITH	Wendover Lower Rochester Road Higham Rochester Kent ME3 7HD	DETAILS	Building Control

	CHECKED ·	APPROVED ·
·	SCALE @A3	DATE

DRAWING No. 17 CHAWORTH - 14 REV A

Plans and contents are bound by Copyright - they are not to be copied or reproduced without prior permission given