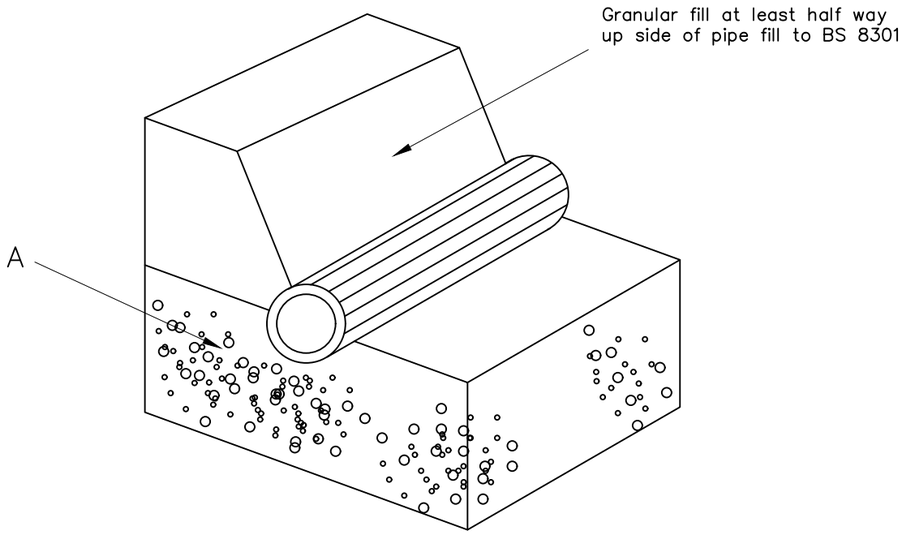

A' denotes good quality fill free of stones larger than 40mm, tree or vegetation material etc.

3 D VIEW

Note D3 - Underground Foul Drainage

- Wherever possible foul drains should discharge into the sewer system.
- The next best alternative is a private sewer connection to a public sewer.
- The next best alternative is a private sewer treatment plant.
- Wherever possible lay pipes straight.
- Use access points or manholes at change of direction.
- Underground foul water pipes up to 100mm in diameter should have a fall of 1 in 80.
- A 1in 100 fall is permissible for drains above 150mm diameter.
- Drainage pipes to be bedded and surrounded with minimum 600mm cover. Unless note on drawings use 150mm diameter.
- Pipes to be clay to BS 65, or UPVC to BS EN 1401.
- Manhole or access fitting to be provided within 12m of start of drain and thereafter not more than 20m apart except by agreement with designer.
- Workmanship to be in accordance with BS 8000 part 14 code of practice for below ground drains.
- Upon completion drains to be air or water tested by agreement with local building control department.

See rainwater drainage detail sheet for further notes on bedding and testing of pipes

Note D5 - Drains under buildings.

- Foul drains or sewers should not extend more than 6m under a building without the sewer and building owners permission.
- Where drains or sewers pass under buildings they should do so in a straight line and have access points or manholes ar either end.
- Sewers running under the building must have an invert level higher than the level of the building foundations.
- Where drainage pipes pass through an external wall they should have adequate lintels above them and pass above the top of adjacent foundations.
- Where drainage pipes pass through an external wall there should be a minimum 50mm gap around the pipe and the gap should be filled with flexible foam sealant. The sealant should have a rigid anti rodent sheet on the outside face.
- Where drainage pipes pass through an external wall use a joint at a max 150mm from the wall on either side.
- Drains in trenches under buildings to be fully surrounded by at least 100mm shingle.
- All dis - used or abandoned drains to be back filled with concrete or shingle.

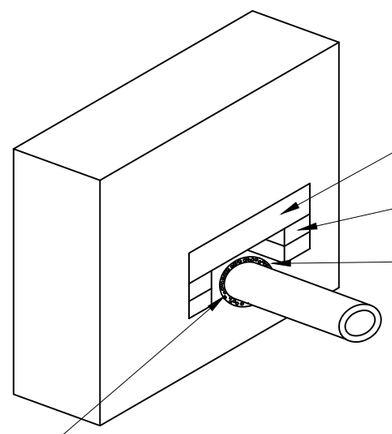

Lintel
Minimum 150mm thick concrete

Engineering brick support at side to provide minimum end bearing of 200mm for lintel

Sand, shingle or polystrene fill around pipe

Note
Above ground and rainwater drainage details, including runs, connections and discharging points, are to be agreed on site with Building Control.

Pipe Trough Wall / Footing

Where pipe passes through wall or footing use minimum 150mm deep concrete lintols over pipe to act as a bridge. Pipe to be surrounded by minimum 25mm polystyrene where it passes through wall or footing.

Arrangement to be inspected prior to covering.

Note D2 - Manholes

- Manholes with invert less than 900mm below ground to be UPVC "off the shelf ", installed in accordance with manufactures notes and back filled.
- If circular use 1200mm clear internal diameter with similar opening size.
- If rectangular use 1200 x 700mm. With similar opening size.
- If deeper than 1500mm refer to designer for detail.
- Manholes located as GA plans but generally not more than 45m apart.
- Manhole benching to be smooth, impervious and slope towards main channel at 1 in 12.
- Manholes deeper than 1m to have secure step irons.
- All manholes within buildings to have double sealed bolt down covers.
- All manhole covers to be screwed down or at least child resistant.
- Cast iron covers to be to BS 497.
- Refer to designer if cover is on a vehicle route.

ANY CHANGES FROM APPROVED DRAWINGS ARE THE RESPONSIBILITY OF CLIENT/CONTRACTOR – PLEASE READ CLAUSED BELOW BEFORE WORKS COMMENCE

Any dimensions taken from this drawing should be cross checked on site and approved prior to any construction works. The contractor shall be responsible for taking all necessary site dimensions and levels and for all exploratory works to verify any existing structure before commencement of works. The contractor will be responsible for all the correct setting out and temporary supports of works on site to property and neighbouring properties

No liability taken of any kind is accepted by Architect for any error or omission Where new work is near/on boundary line/party wall the property owner is to serve party wall notice to the adjoining property/land owner in accordance with the requirements of the 'Party Wall etc.' Act 1996

Contractor responsible for notifying of Building Control Surveyor of each stage of works and ensure inspections have been made. All details to comply with current building regulations and Building Control Approval. Work not to commence until approval of plans by Building Control Body. Any works that commence before Building Regulations drawings have been approved is responsibility of client.

After confirmation from local authority that prior approval is not required, proposed extension must comply with all permitted development criteria set out under the General Permitted Development Order 1995

Any development carried out without Permitted Development Certificate is at owner's own risk. It is strongly advised that a Permitted Development Certificate/Certificate of Lawfulness is sought prior to commencement of any works

FD30 — FD30
All habitable room doors to be replaced with FD30 doors with 38x25mm Door Stops and 3 No Stainless Steel Hinges. Middle Hinge to be installed at least ⅔ of way up door frame

SD — Mains powered with battery back up interlinked smoke detector to be installed within at least 7.5m of all habitable rooms and at least 30cm from any light fitting or wall

HD — Mains powered and interlinked operated heat detector with battery back up

Ex — Extractor fan for shower room – 15l/s and Kitchen 30l/s to be taken through to run and expel externally

For Structural Steelwork refer to Structural Engineer's Drawing. Beams indicated by red dashed lines (see right)

All Steel work to be encased in 2 layers of FireLine Board with staggered joints or fire resisting intumescent paint in accordance with manufacturer's guidance to provide minimum 60min fire resistance

All Steel work to only be ordered once contractor has confirmed dimensions on site and positioning with client. Any discrepencies noted to be discussed with Surveyor prior to ordering any steel work. No responsibility taken by Surveyor for steels ordered to match site conditions

A-Z Building Services

A: Addlestone KT15
E: hthuseyin0809@msn.com

T: 07969925562

Underground Foul Drainage Details Applicable Sheet 2

SUBJECT TO Approval

CLIENT	PROJECT	DRAWING	STAGE
Mr and Mrs SMITH	Wendover Lower Rochester Road Higham Rochester Kent ME3 7HD	DETAILS	Building Control

	CHECKED	APPROVED
	SCALE @A3	DATE

DRAWING No. 17 CHAWORTH-18 — REV A

Plans and contents are bound by Copyright - they are not to be copied or reproduced without prior permission given